81.2 - Exhibit 01

UW Building Configuration

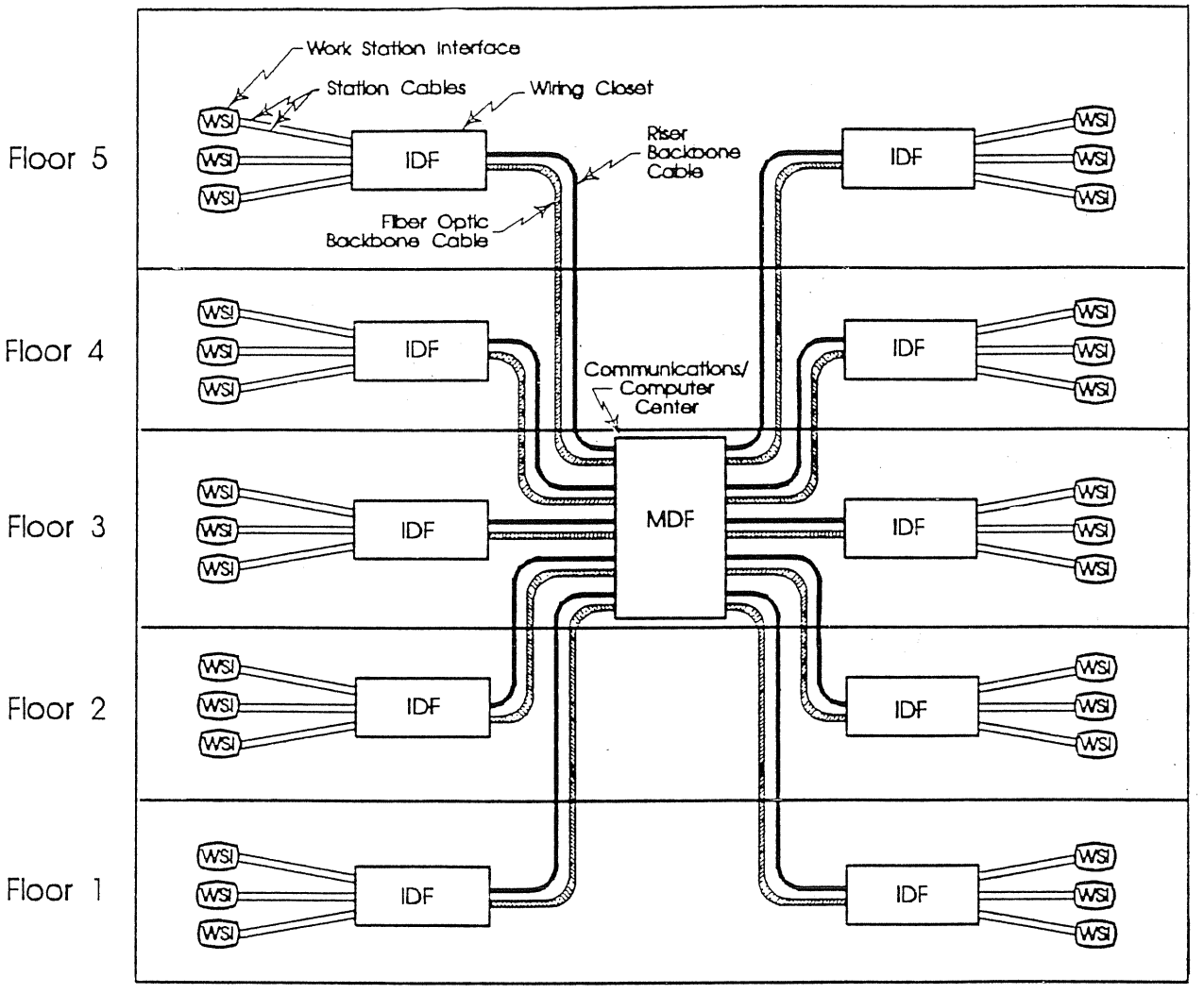

81.2 - Exhibit 02

UW Floor Configuration

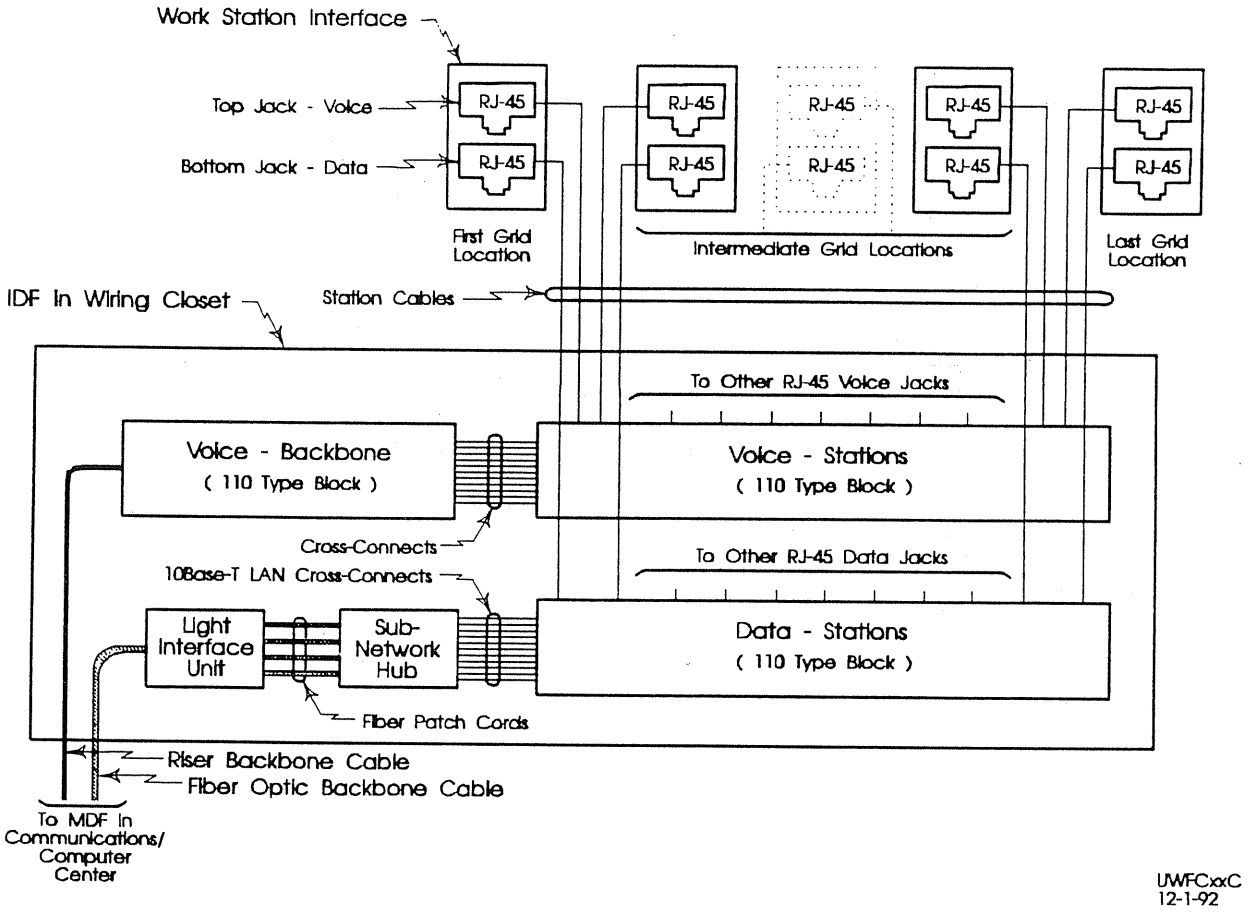

UWFCxxC
12-1-92

81.2 - Exhibit 03

Intelligent Wiring Hub

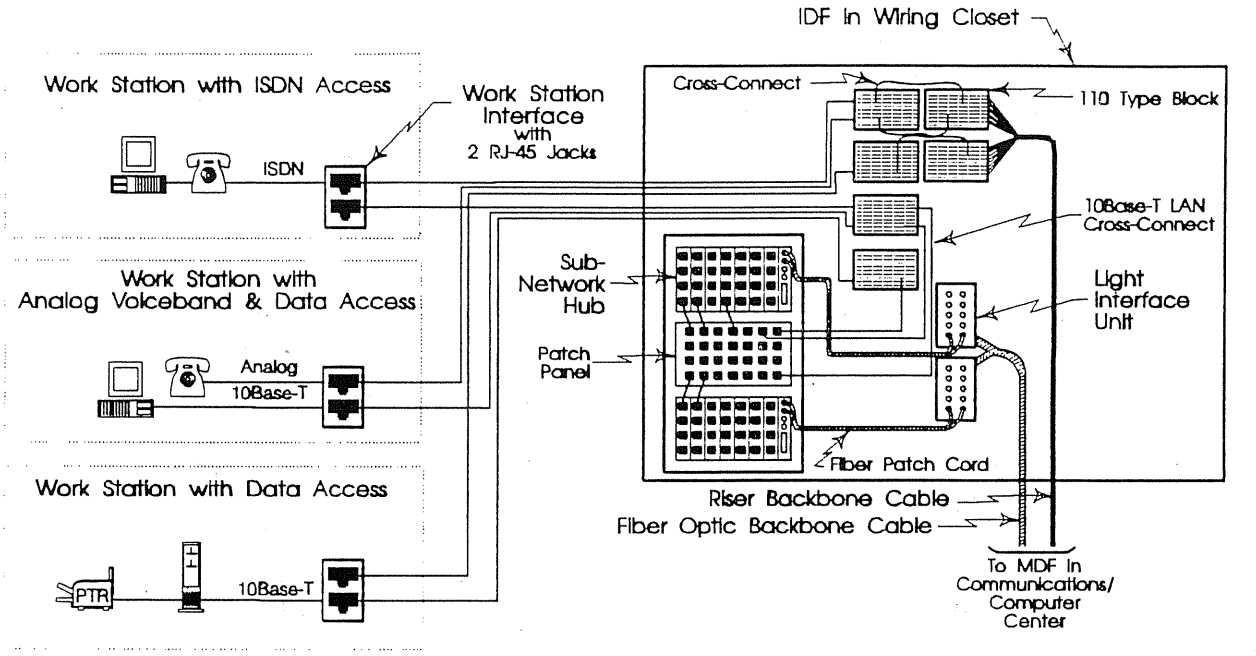

IWHbxC
12-1-92